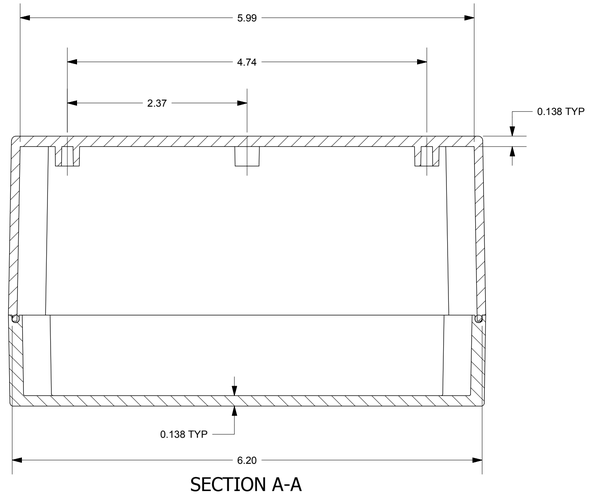

SECTION A-A

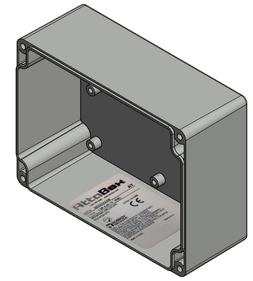

PRODUCT LABEL DETAIL

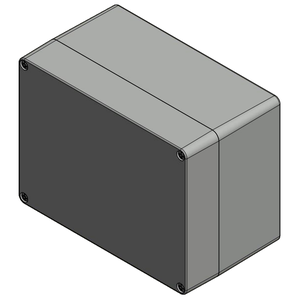

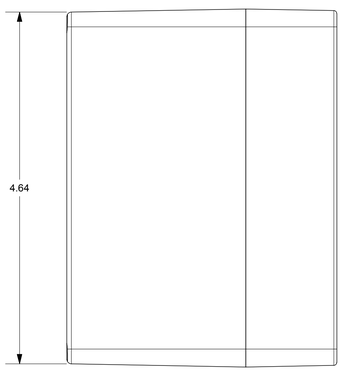

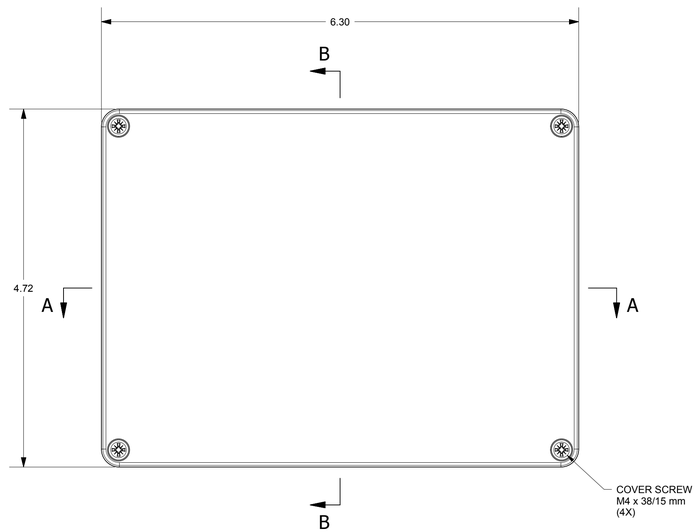

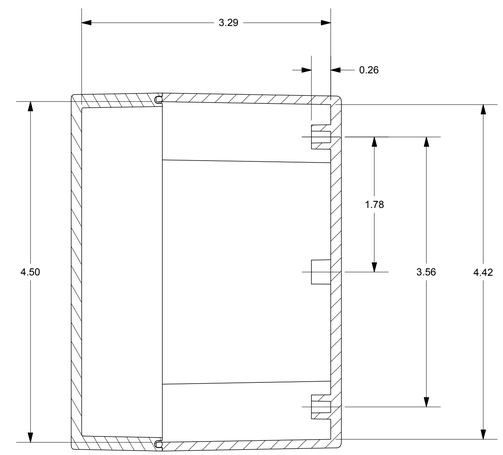

SECTION B-B

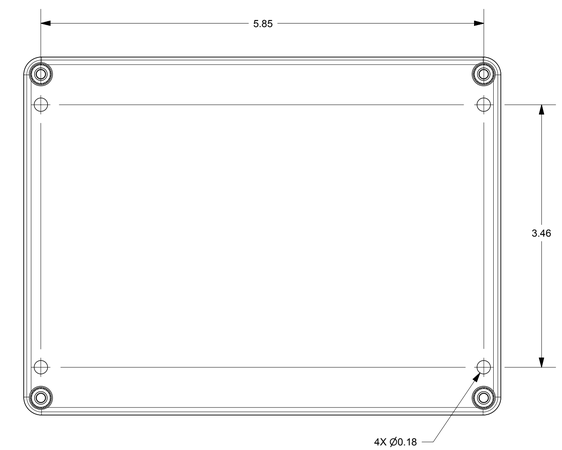

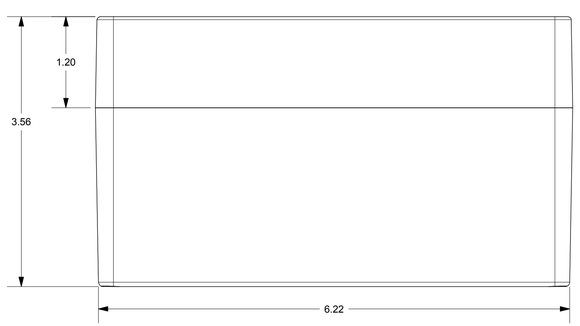

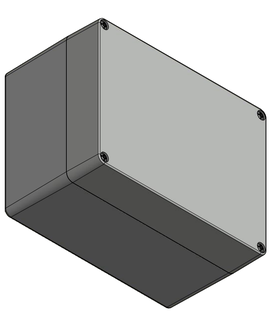

END USER NOTES:
1. TORQUE COVER SCREWS TO 9-17 IN.-LBS. TO MAINTAIN RATINGS

THIS DRAWING IS THE SOLE AND EXCLUSIVE PROPERTY OF ROBROY ENCLOSURES. NO PART OF THIS DRAWING MAY BE REPRODUCED, DISTRIBUTED, OR PUBLICALLY DISPLAYED IN ANY FORM OR BY ANY MEANS WITHOUT THE EXPRESS WRITTEN PERMISSION OF ROBROY ENCLOSURES. ALL RIGHTS RESERVED UNDER THE COPYRIGHT LAWS. COPYRIGHT © 2017 ROBROY ENCLOSURES

SPECIAL REQUIREMENTS

NEMA 250: TYPE 1, 3R, 4, 4X, 12
IEC 60529: IP66
COLOR: LIGHT GREY
COLOR STANDARD: RAL 7035

STANDARD P/N: BB161290W
CUSTOMER DWG:

ALL DIMENSIONS ARE IN INCHES UNLESS OTHERWISE SPECIFIED

TOLERANCES UNLESS SPECIFIED	.XX	.XXX
	± 0.03	± 0.010

MATERIAL: POLYCARBONATE

REVISION HISTORY

REV	DESCRIPTION	DATE	ENG
-	-	-	-
-	-	-	-
-	-	-	-
-	-	-	-
-	-	-	-
-	-	-	-

AttaBox
WWW.ATTABOX.COM

Robroy Enclosures
500 Maple Street
Belding, Michigan 48809
Phone: 616-794-0700
Fax: 616-749-3378

DRAWN BY	DATE	CUSTOMER	DWG
E91	04/14/17		BB161290W
SCALE		DESCRIPTION	PART NUMBER
DO NOT SCALE		STANDARD ENCLOSURE	ATBB161290W