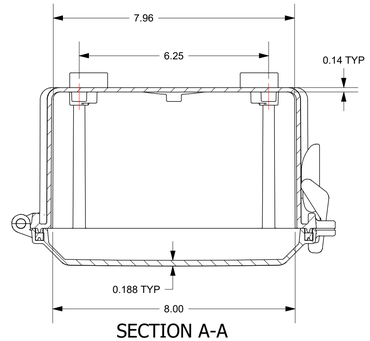

SECTION A-A

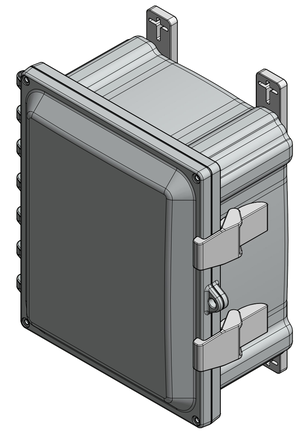

FOR REFERENCE ONLY
MOUNTING FEET SHOWN AS INSTALLED

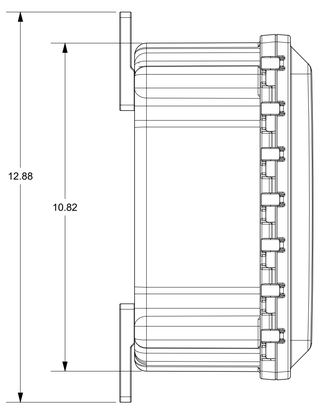

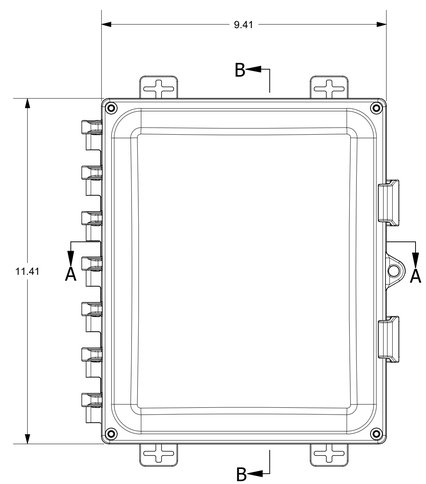

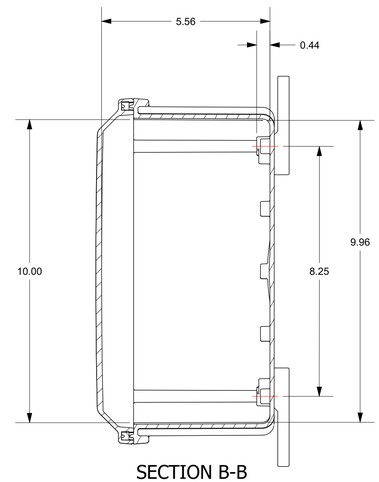

SECTION B-B

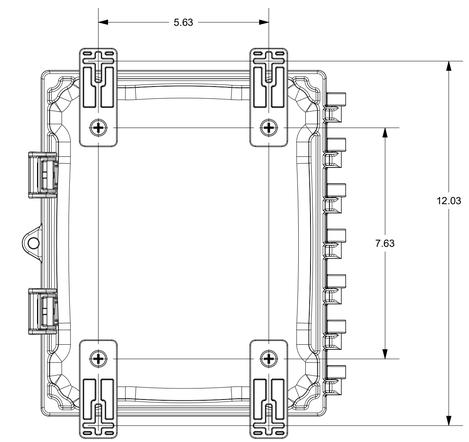

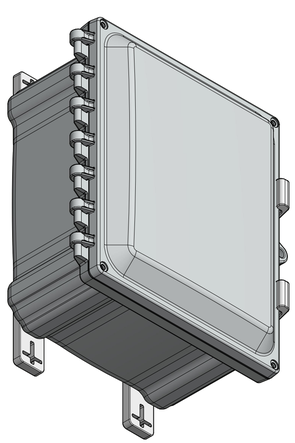

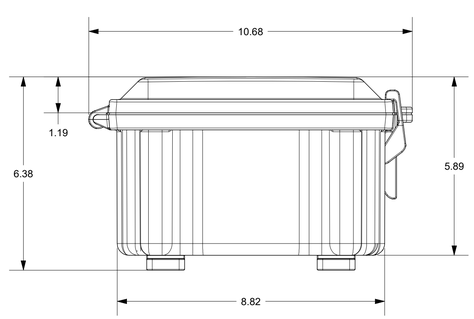

SPECIAL REQUIREMENTS

ASSEMBLY:

1. (1) ACCESSORY KIT (WPPCACCKIT) SHALL BE PACKAGED LOOSELY INSIDE ENCLOSURE
   HARDWARE INCLUDED:
   - -(4) #1/4-20 x 1/2 FLAT HEAD PHILLIPS MACHINE SCREW (RMSC1/4-20X.5FLPH)
   - -(4) #10-32 x 5/8 PAN HEAD PHILLIPS MACHINE SCREW (RMSC10/32X5/8SS)
   - -(4) #10-32 x 3/8 PAN HEAD SCREW (RMSC10/32X3/8ZN)
   - -(4) #10 WASHER (RMWAS10ZN)
2. (1) STYROFOAM SHEET SHALL BE PLACED ON TOP OF COVER INSIDE CARTON

THIS DRAWING IS THE SOLE AND EXCLUSIVE PROPERTY OF ROBROY ENCLOSURES. NO PART OF THIS DRAWING MAY BE REPRODUCED, DISTRIBUTED, OR PUBLICALLY DISPLAYED IN ANY FORM OR BY ANY MEANS WITHOUT THE EXPRESS WRITTEN PERMISSION OF ROBROY ENCLOSURES. ALL RIGHTS RESERVED UNDER THE COPYRIGHT LAWS. COPYRIGHT © 2016 ROBROY ENCLOSURES

NEMA 250: TYPE 1, 3R, 4, 4X, 12
IEC 60529: IP66
COLOR: N/A
COLOR STANDARD: PANTONE 7541 C

STANDARD P/N: AH1084
CUSTOMER DWG:

ALL DIMENSIONS ARE IN INCHES UNLESS OTHERWISE SPECIFIED

TOLERANCES UNLESS SPECIFIED	.XX	.XXX
	± 0.03	± 0.010

MATERIAL: POLYCARBONATE

REVISION HISTORY

REV	DESCRIPTION	DATE	ENG
-	-	-	-
-	-	-	-
-	-	-	-
-	-	-	-
-	-	-	-
-	-	-	-

AttaBox
A ROBROY ENCLOSURES™ BRAND

Robroy Enclosures
500 Maple Street
Belding, Michigan 48809
Phone: 616-794-0700
Fax: 616-749-3378

DRAWN BY	DATE	CUSTOMER	DWG
AJC	10/22/16		AH1084
SCALE		DESCRIPTION	PART NUMBER
DO NOT SCALE		STANDARD ENCLOSURE	ATAH1084