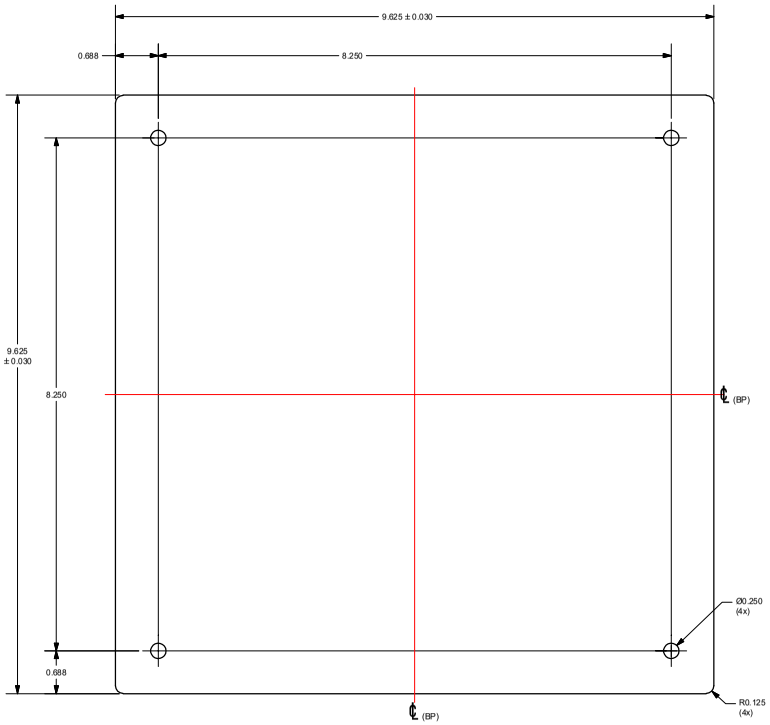

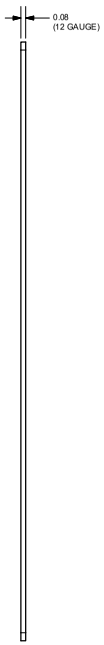

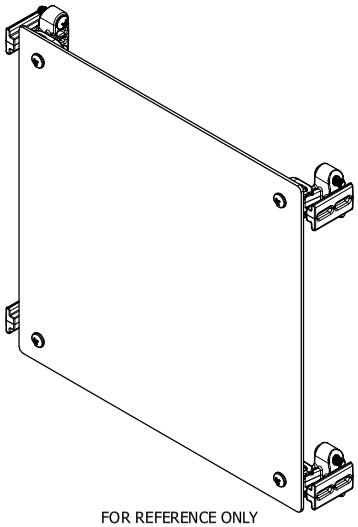

FOR REFERENCE ONLY
SWING PANEL MOUNTS SHOWN AS INSTALLED

NOTES:
1. PANEL SHALL BE FREE FROM BURRS & SHARP EDGES
2. PANEL SHALL BE FLAT
3. MISALIGNED EDGES EXCEEDING 0.005" (STEPS) SHALL NOT BE PERMITTED
4. ALL EDGES SHALL BE SQUARE AND PARALLEL
5. PANEL SHALL HAVE CLEAR PVC FILM ON ONE SIDE
6. ALL "2424" SIZE PANELS AND BELOW SHALL BE PACKAGED IN AN ENVELOPE WITH NO METAL (CLASP)
7. ALL "3020" SIZE PANELS AND ABOVE SHALL BE PACKAGED IN CARDBOARD WITH NO METAL (STAPLES)

SPECIAL REQUIREMENTS

ASSEMBLY:
1. SWING PANEL KIT INCLUDES THE FOLLOWING:
   - (1) ALUMINUM SWING PANEL (RMAH1010SP)
   - (1) SWING PANEL MOUNT KIT (ATAHSPM)

THIS DRAWING IS THE SOLE AND EXCLUSIVE PROPERTY OF ROBROY ENCLOSURES. NO PART OF THIS DRAWING MAY BE REPRODUCED, DISTRIBUTED, OR PUBLICALLY DISPLAYED IN ANY FORM OR MANNER WITHOUT THE EXPRESS WRITTEN PERMISSION OF ROBROY ENCLOSURES. ALL RIGHTS RESERVED UNDER THE COPYRIGHT LAWS. COPYRIGHT ©2018 ROBROY ENCLOSURES

NEMA 250: TYPE	N/A
UEC 60529:	N/A
COLOR:	N/A
COLOR STANDARD:	N/A
STANDARD P/N:	AH1010SPK
CUSTOMER DWG:	

MATERIAL: 3003-H14 ALUMINUM

REVISION HISTORY

REV	DESCRIPTION	DATE	ENG
-	-	-	-
-	-	-	-
-	-	-	-
-	-	-	-
-	-	-	-
-	-	-	-

ALL DIMENSIONS ARE IN INCHES UNLESS OTHERWISE SPECIFIED

TOLERANCES UNLESS SPECIFIED	.XX	.XXX
	± 0.03	± 0.010

AttaBox
A MEMBER OF ROBROY GROUP
WWW.ATTABOX.COM

Robroy Enclosures
500 Maple Street
Belding, Michigan 48809
Phone: 616-794-0700
Fax: 616-749-3378

DRAWN BY	DATE	CUSTOMER	DWG
AA	02/06/18		AH1010SPK
SCALE		DESCRIPTION	PART NUMBER
DO NOT SCALE		STANDARD SWING PANEL KIT	ATAH1010SPK